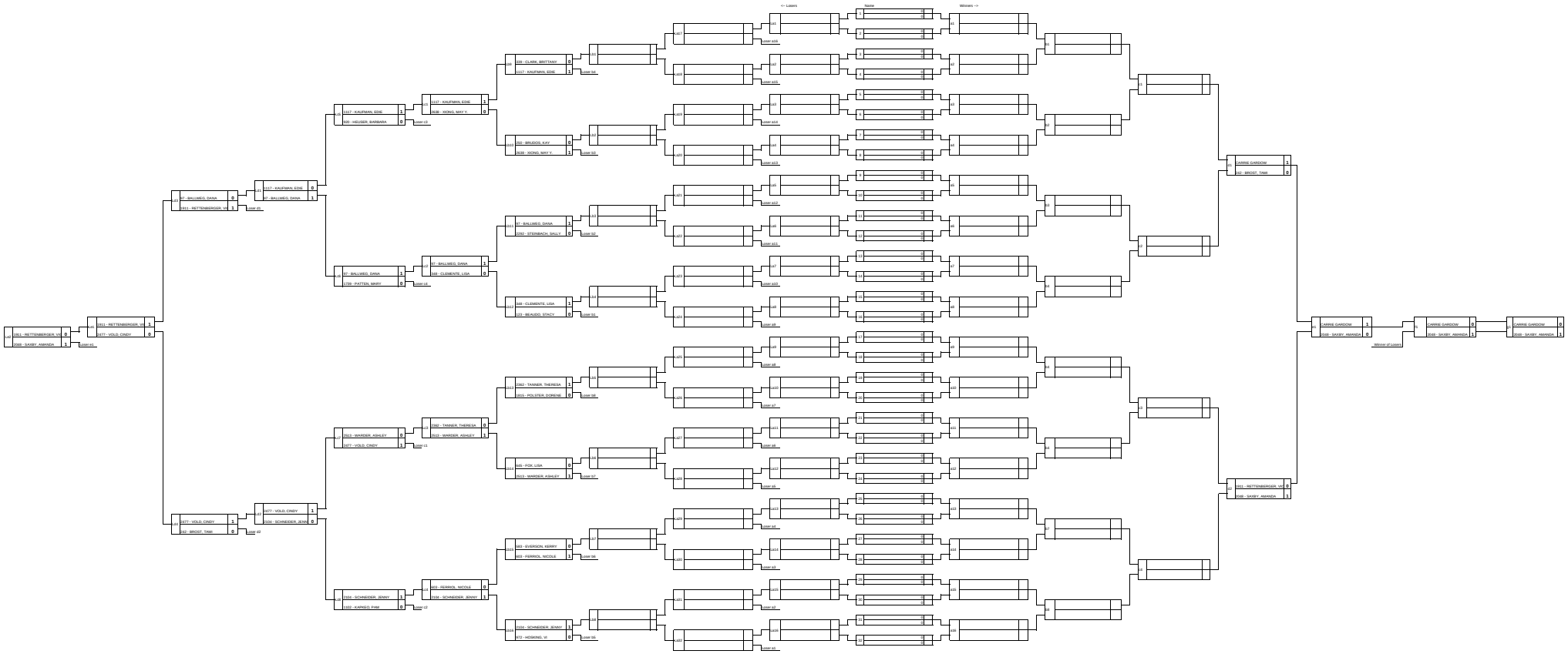2011 Women's Singles B 8-Ball Final Bracket 3/20/2011